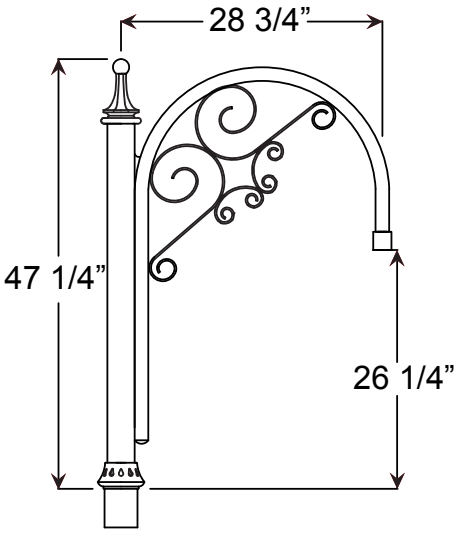

Project: _____

Fixture Type: _____ **Quantity:** _____

Customer: _____

Made in USA

Illuminating ENGINEERING SOCIETY

Weight: 19.0 lbs
EPA: 1.47

Specifications

General:
Due to size or weight, arms mounts may not accommodate all ANP luminaires.

Material:
All parts are durable 356 cast aluminum and high strength extruded aluminum.
All hardware provided shall be stainless steel or zinc plated steel.

Fixture Mounting:
Pin mount to tenon.

Post Arm Mounting:
Slip tenon to accomodate 3”, 4” and 5” pole. Pole section of arm matches pole diameter and style.

Electrical:
Pull wire provided.

Finish:
A polyester powder coat high quality finish is electro-statically applied and baked at 430° for exceptional durability and color retention. Products undergo an intensive five-step cleansing and pretreatment process for maximum paint adhesion.

Marine grade finish provides superior salt, humidity and UV protection. This coating withstands up to 3000 hours of continuous salt spray, comes with a 5-year warranty and is available in either a textured or gloss surface.

Modifications:
Consult factory for custom or modified designs.

PA191 - POST ARM

Extruded aluminum post arm for pendant fixture.

Catalog Logic

PA191	- 3	- 4	- N/A	- 3	- S	- 72
Post Arm Style	Pendant Post	Number of Arms	Center Mount	Pole Diameter	Pole Style	Finish

Catalog Number

	1	2	3	4	5	6
PA191	3		N/A			

1 Arm Configuration	2 Arm Configuration	3 Arm Configuration	4 Arm Configuration
		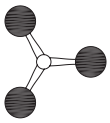	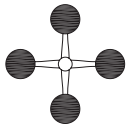

1 POST ARM ORIENTATION

3 - Pendant

2 NUMBER OF ARMS

1 - One Arm Configuration

2 - Two Arm Configuration

3 - Three Arm Configuration

4 - Four Arm Configuration

3 CENTER MOUNT OPTIONS

N/A

4 POLE DIAMETER

3 - 3 Inch

4 - 4 Inch

5 - 5 Inch

5 POLE STYLE

S - Smooth

F - Fluted

6 FINISHES

Standard Grade	Marine Grade		Standard Grade	Marine Grade	
40	NA	Raw Unfinished	53	100	Copper Clay
41	101	Black	56	109	Silver
42	102	Forest Green	61	106	Black Verde
43	114	Bright Red	70	118	Painted Chrome
44	107	White	71	105	Painted Copper
45	112	Bright Blue	72	108	Textured Black
46	123	Sunny Yellow	73	125	Matte Black
47	120	Aqua Green	76	121	Textured Architectural Bronze
49	NA	Galvanized	77	127	Textured White
50	111	Navy	78	124	Textured Silver
51	103	Architectural Bronze	10	130	Aspen Green
52	104	Patina Verde	11	131	Cantaloupe
12	133	Lilac	13	132	Putty

06202018

© 2018 ANP Lighting. All rights reserved. These specifications are intended for general purposes only.
ANP reserves the right to change material or design, without prior notice, in a continuing effort to upgrade its products.

1-800-548-3227
ANPlighting.com